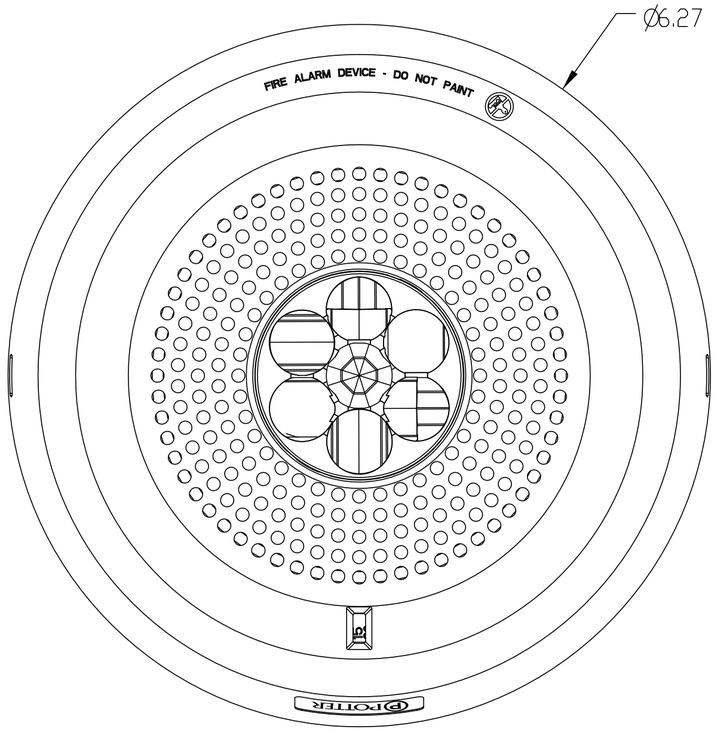
Ø6.27
FIRE ALARM DEVICE - DO NOT PAINT
POTTER

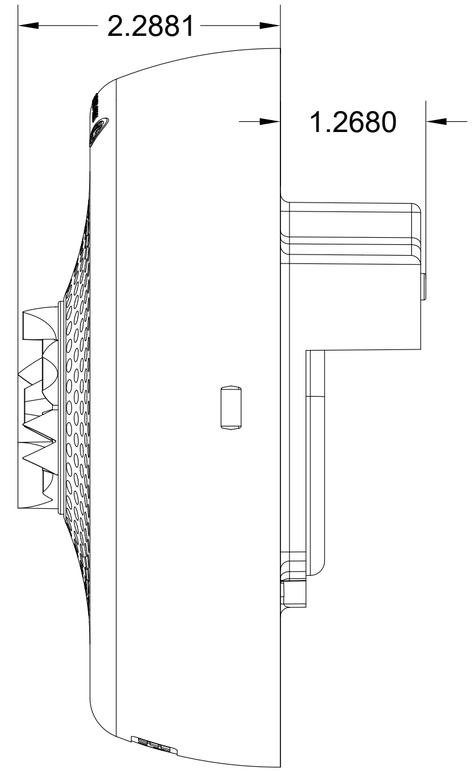
2.2881
1.2680

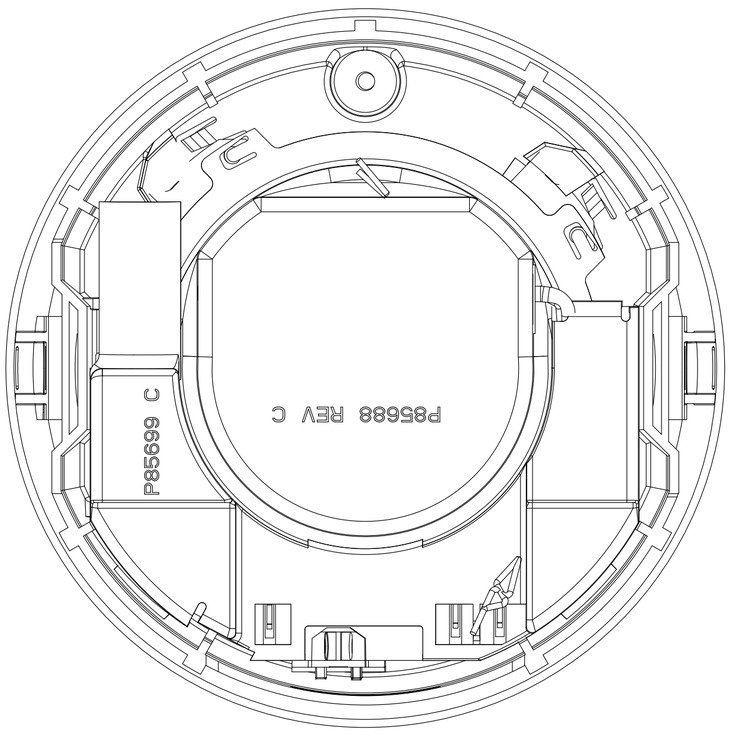
P85699 C
P85688 REV C

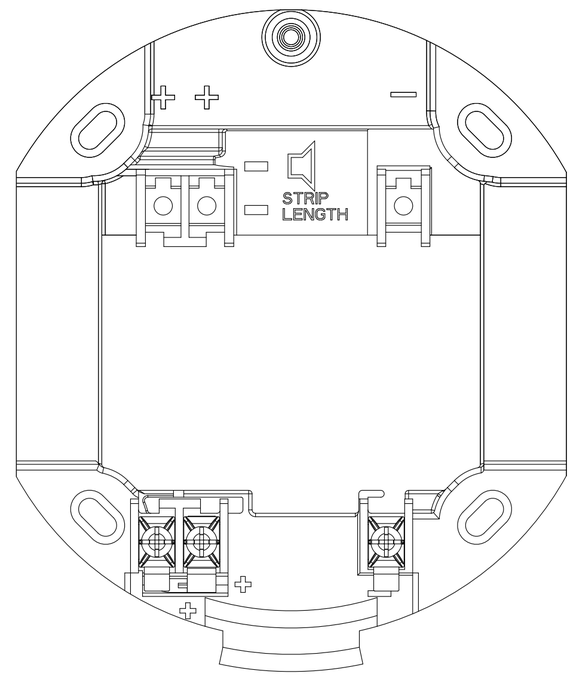
STRIP
LENGTH