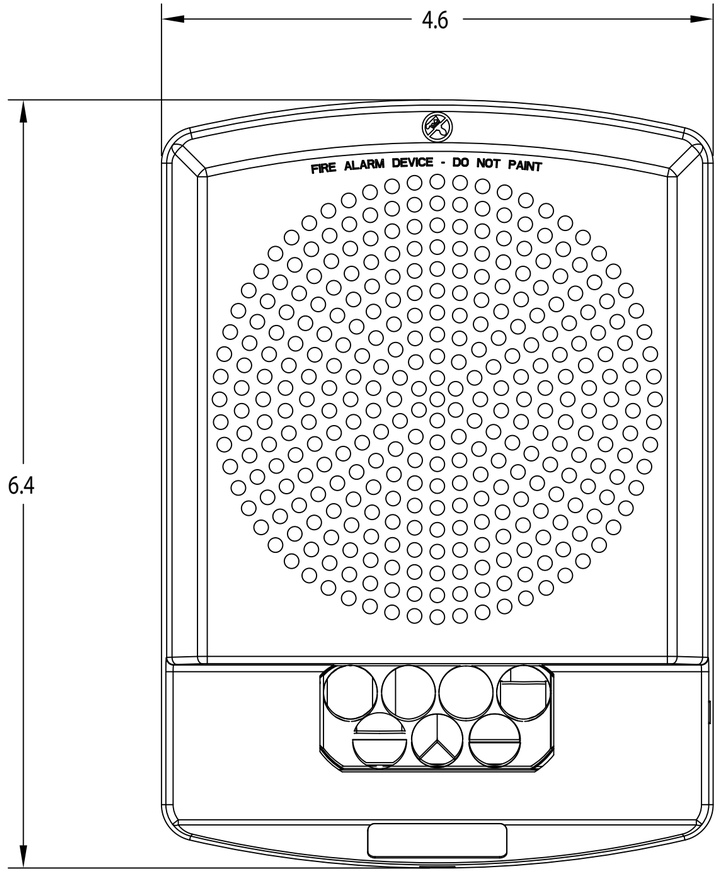
4.6
6.4
FIRE ALARM DEVICE - DO NOT PAINT

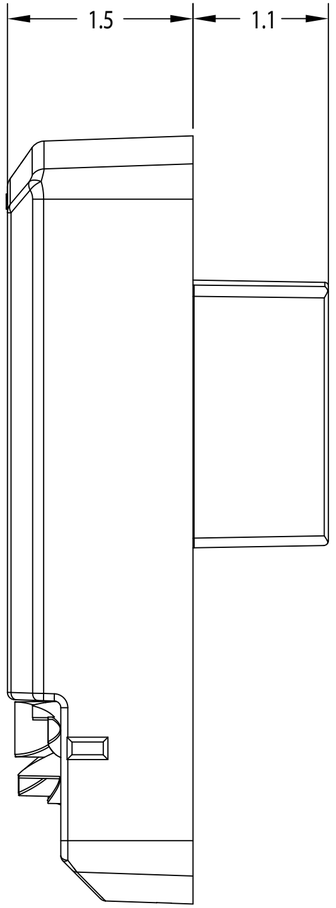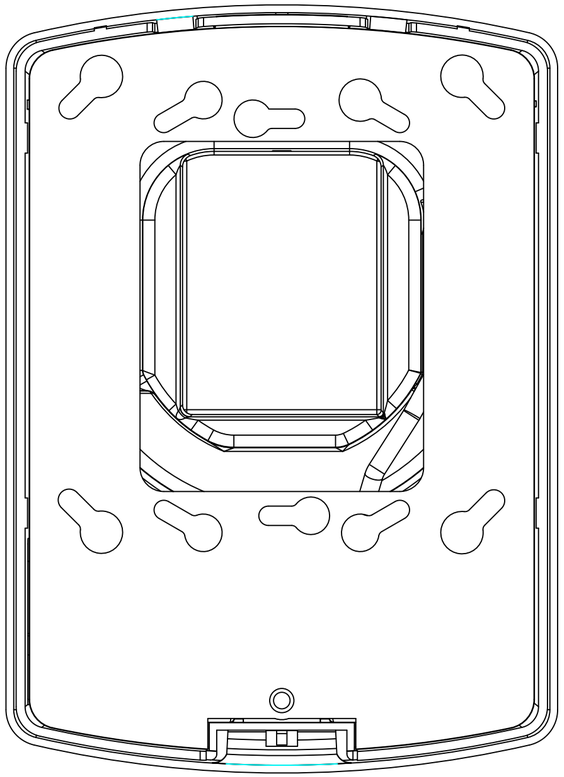
1.5
1.1