Guardian BBU

BDA Power and Battery Charger System
Installation Guide

Potter Electric Signal Company, LLC
St. Louis, MO
Customer Service: (866) 240-1870 • Technical Support: (866) 956-1211 • Fax: (314) 595-6999
For listing information visit our web site www.pottersignal.com

Manual #5409349 • Rev A • 2/26

Table of Contents

1.	Overview and Description	5
2.	Features and Performance Specifications	6
3.	Environmental Specifications	7
4.	Standby Requirements	7
5.	Installation Instructions	8
6.	Power Supply Charging Configuration and Front Panel Indicators	11
7.	Wiring Diagrams	12
8.	Integrated Annunciator Front Panel LED Diagnostics	16
9.	Testing And Maintenance	18
10.	Power Supply Troubleshooting	19
11.	Potter PAD300-10XIM Multi Input/Output Module Installation (Optional)	20
12.	Mechanical Assembly Drawings	21
13.	Connectors installation	22
14.	Warranty	23

Abbreviations

AGM	Absorbed Glass Mat
Ah	Ampere Hours
AHJ	Authority Having Jurisdiction
BBU	Battery Backup Unit
BDA	Bi-Directional Amplifier
DMM	Digital Multimeter
ERCES	Emergency Radio Communications Enhancement System
EPO	Emergency Power Off
EOLR	End of Line Resistor
FACP	Fire Alarm Control Panel
LED	Light Emitting Diode
LiFePo4	Lithium Ferrite Phosphate 4
QA	Quality Assurance
SLA	Sealed Lead Acid
SKU	Stock Keeping Unit
VAC	Volts Alternating Current
VDC	Volts Direct Current

Safety Notices	
	The power supply requires 120/220 VAC from the building AC mains power which provides dangerous voltage and current levels to the power supply. Follow all local and national codes and standards regarding electrical safety. AC main power MUST be shut off prior to performing work on this backup power supply
	Electrostatic discharge sensitive printed circuit boards are present in this backup power supply. Use caution while handling and always ground yourself to the enclosure before putting hands in proximity to electronic devices.
	This battery backup unit must be properly grounded. Follow all local and national codes and standards regarding equipment grounding.

Packing List

Quantity 1 - BBU (PN# 3996203 or PN# 3996204)

Quantity 1 - Mounting Bracket (Upper and Lower)

Quantity 1 - Mounting Bracket Template

Quantity 1 - Accessories Packet:

- *Quantity 8 - Liquid Tight Connectors*
- *Quantity 6 - Machine Hex Screws*
- *Quantity 1 - Battery Mounting Strap*
- *Quantity 1 - Battery Jumper (series installation)*
- *Quantity 6 - 10K Ohm 1/4W EOLR*

Tools Required

Quantity 1 - 3/8-inch Power Drill and Drill bits

Quantity 1 - Hex Wrench or Socket

Quantity 1 - 12-inch Level

Quantity 1 - Digital Multimeter

Quantity 1 - Wire Stripping Tool

Quantity 1 - Philips Head Screwdriver

1. Overview and Description

The Potter ERCES Guardian BBU is a 24VDC 6.5A output (PN# 3996203) or 10.5A output (PN# 3996204) in-building power supply and battery backup solution for ERCES (Emergency Radio Communication Enhancement Systems). The BBU is listed under UL2524 3rd Edition and meets NFPA 1225 codes thus providing integrators and consultants with an approved BDA power and backup option.

The Guardian BBU provides an auxiliary 120/220 VAC output with no backup and 24V DC output with backup that can support 12-hour or 24-hour operation utilizing two (2) 12V 55AH or 110AH SLA AGM batteries or one (1) 24V LiFePo4 battery up to 150AH. In addition, the power supply provides 3-stage charging of both AGM and LiFePo4 battery types without the need to reconfigure the unit. The power supply is fully protected against short circuits, overload, over temperature, over voltage, and reverse polarity connections. An optional remote EPO switch is supported for emergency shutdown of both auxiliary AC and DC output power if required by the AHJ.

The Guardian BBU also provides an integrated UL2524 3rd edition and NFPA 1225 compliant annunciator function with LED supervisory indications on the front door assembly. An associated audible sounder is also provided for each supervisory indication that can be silenced via a mute button (SW1 – Annunciator PCBA, see Section 7.3 Figure 5) located within the lockable enclosure. The audible alarm will resound if muted every 24 hours until the supervisory condition is resolved.

Remote annunciator(s) are also supported via Form C relay (Failsafe type) dry contact output or P-Link (Potter proprietary RS-485 based 4-wire bi-directional communications link for Potter remote annunciators only).

The BBU can be connected to an FACP via Form C relay outputs and vendor specific interface module or an optionally internally mounted Potter Multi I/O board purchased separately (compatible with Potter FACP panels only).

NOTICE

Secondary independent power source:

- In USA: The secondary power source must be provided by a separate equipment complying with UL 864, the Standard for Control Units and Accessories for Fire Alarm Systems or UL 1481, the Standard for Power Supplies for Fire Protective Signaling Systems, and which are supplied by at least two independent power sources.
- In Canada: The secondary power source must be provided by a separate equipment complying with CAN/ULC S527, Standard for Control Units and Accessories for Fire Alarm Systems.

2. Features and Performance Specifications

Agency Listings	• UL2524 3rd Edition Standard for In-building 2-Way Emergency Radio Communication Enhancement Systems
Input	• 230VAC/115VAC, 50/60Hz 1.4A/ 2.8A • Input breaker Rating: 250VAC/15A
Output	• 230/115VAC auxiliary and 24VDC regulated output with up to 24 hours of backup: ○ 24VDC @ 6.5A (PN# 3996203) ○ 24VDC @ 10.5A (PN# 3996204)
Annunciator PCBA Supervisory Indication Output (via Form "C" contact relays)	• AC Failure • Charger Circuit Failure • Battery Low • Donor Antenna Malfunction • Active RF Emitter Failure • System Component Failure • Summary (Any of the Above)
Battery Backup	• Built-in charger for Sealed Lead Acid/AGM or LiFePO4 batteries up to 110Ah SLA or 150Ah LiFePo4 (Automatic detection) • Supports two (2) 12V 55Ah or two (2) 110Ah Sealed Lead Acid/AGM batteries in series for 24V • Supports one (1) 24V 150Ah LiFePO4 battery • Automatic switch over to stand-by battery when AC fails. • Battery Breaker 15A rating • Maximum battery charging current for 10A Power Supply: 3A • Maximum battery charging current for 20A Power Supply: 5A
Integrated Front Panel Annunciator with Audible Sounder	• AC Power Normal • AC Failure • Charger Circuit Failure • Battery Low • Donor Antenna Malfunction • Active RF Emitter Failure • System Component Failure
Remote Annunciation via P-Link™	• P-Link is based on a RS485 Physical Layer and Potter proprietary protocol which can support up to 16 uniquely addressable remote annunciators • Maximum distance of the P-link network is 6500 feet • Provides optional 24 VDC power to remote units • Standby Current: 20 mA • Alarm Current: 25 mA • Wire Guage Recommendation: 12 AWG – 22 AWG • Supports up to six (6) UL2524 supervisory indications
Enclosure Dimensions **• (H x W x D)**	• 22.9" x 25.2" x 10.9" (582mm x 640mm x 277mm)

3. Environmental Specifications

Operating Temperature	-20 to +40°C (-4 to +104F) Note: Battery capacity decreases significantly at -20°C, a larger battery is required to support 12-hour operating capacity.	Battery performance impacted at temperature extremes
Storage Temperature	-30 to +60°C (-22 to +140F)	No Battery Installed
Humidity	20% to 90% RH non-condensing	Working Humidity
Environmental Rating	UL50E	As required by UL2524 3rd Edition

4. Standby Requirements

Output	Battery Requirement	Stand-By Alarm Current	Stand-By Time
24VDC	12VDC/55Ah Battery (2 in series), Total capacity 55Ah	3.5A (Note 1)	12 Hours
24VDC	12VDC/110Ah Battery (2 in series), Total capacity 110Ah	3.5A (Note 1)	24 Hours
24VDC	24VDC/150Ah Battery (single), Total capacity 150Ah	5.65A (Note 2)	12 Hours

- NOTE1: Example Guardian UHF 5W - 90W power consumption (while transmitting) = 3.5A @ 24VDC
- NOTE2: Example Guardian Fiber DAS Head End Unit 2W – 135W power consumption (while transmitting) = 5.65A @ 24VDC
- NOTE3: Installer must install UL compliant LiFePo4 batteries. UL2524 3rd Edition requires Lithium batteries connected in series or parallel comply with the requirements of UL 2054 and protected from abnormal charging current as required in UL1642. See UL2524 3rd Edition section 26.2.1 and 26.2.2 for details.

Standby Reference Chart

Battery / Load	10AH	20AH	50AH	100AH	200AH
1.5A	350min	13h	33h	67h	133h
3A	125min	350min	17h	33h	67h
5A	60min	180min	600min	20h	40h
7.5A	35min	90min	350min	13h	27h
10A	23min	60min	240min	10h	20h
15A	13min	35min	125min	350min	13h

5. Installation Instructions

Wiring methods shall be in accordance with the National Electrical Code/NFPA 70/NFPA 72/ANSI, Canadian Electrical Code, Part 1 and with all local codes and authorities having jurisdiction

Product is intended for indoor use only. All connections to the BBU must be made via the pre-drilled through holes on the top panel of the enclosure using the supplied liquid tight fittings to ensure a liquid tight environment inside the BBU as required by UL2524 and local and national fire codes.

1. Mount unit in the desired location: Use the supplied mounting bracket template to mark and predrill holes in the wall to line up with the mounting bracket hardware keyed through holes included with the product. Ensure the template is level prior to drilling.

2. Use the supplied six (6) masonry hex screws and screw them into the predrilled holes leaving ¼ inch of thread exposed to hang the BBU enclosure prior to final tightening of mounting bolts.

3. Attach wall mounting brackets using the supplied six (6) hex machine screws to the enclosure as shown on Fig. 1 below and then hang the BBU enclosure onto the pre-installed mounting bolts and secure the bolts to the wall.Mount unit in the desired location: Use the supplied mounting bracket template to mark and predrill holes in the wall to line up with the mounting bracket hardware keyed through holes included with the product. Ensure the template is level prior to drilling.
4. Verify power supply charger setting is correct. Charger must be set for 3-stage charging and AGM/LiFePO4 charging profile as set by the factory. Observe that the Power Supply front panel DIP switches are set as follows: 1 to OFF and 2 and 3 to ON. See Section 6, Figure 2 for details.

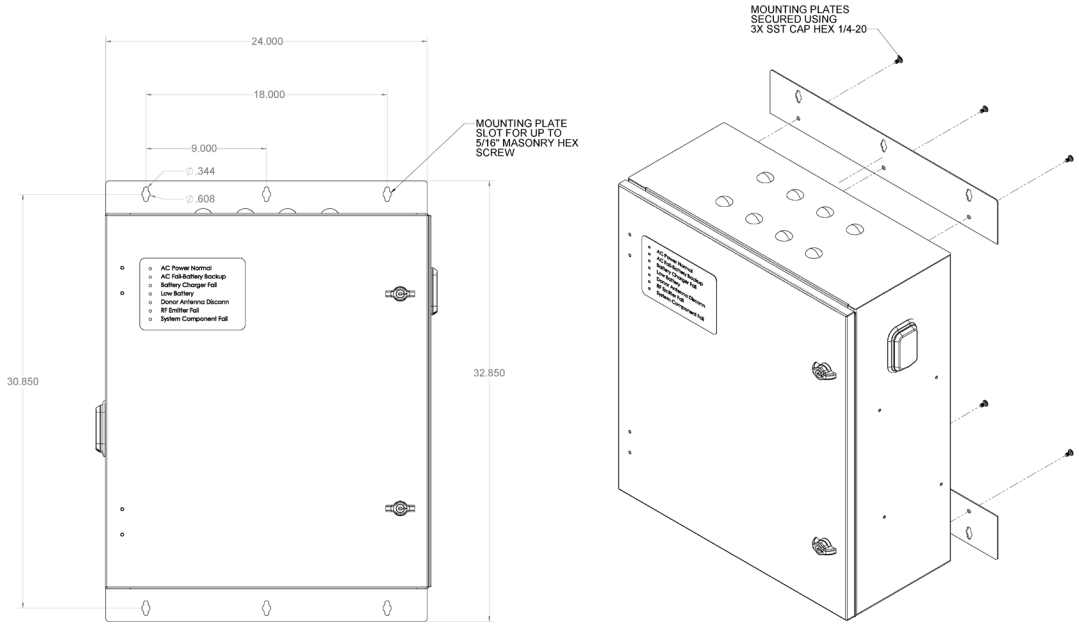

Figure 1

5. Connect AC Input (115VAC-220VAC 50/60Hz) power cable to the BBU AC Circuit Breaker Load (L), DIN rail mounted terminal block Neutral (N), and enclosure labeled Ground (G) post as shown in Section 7.3 Figure 5 and described in Section 7.3.1 Item 1. The AC source must comply with all local and national building and fire codes. DO NOT ENGERGIZE THE CIRCUIT UNTIL ALL CONNECTIONS BELOW ARE MADE AND VERIFIED.

6. If required, connect the Guardian BDA to the BBU AC Output using the AC power cable supplied with the BDA (some Guardian BDA products require both AC IN and 24VDC). Connect the BDA power cable ground (G) to the labeled enclosure GND point (see figure 5), then connect the power cable Neutral (N) and Load (L) terminals to the respective DIN rail mounted terminal blocks as shown in Section 7.3 Figure 5 and described in Section 7.3.1 Item.

7. Connect the Guardian BDA to the BBU 24VDC output using the power cable supplied with the BDA. Connect the power cable (+/- DC) wires to the BBU DIN rail mounted terminal blocks as shown in Section 7.3 Figure 5 and described in Section 7.3.1 Items 2 and 3.

8. Connect the Guardian BDA dry contact alarm output (DONOR MALFUNCTION, RF EMITTER FAILURE, SYSTEM COMPONENT FAILURE) to the Annunciator PCBA alarm inputs as shown in Section 7.3 Figure 5 and Section 7.3.1 Item 5. The BDA supervisory alarm status will be shown on the front panel annunciator LED's in conjunction with an audible sounder.

9. If required by the AHJ, connect an EPO switch as shown in Section 7.3 Figure 5 and described in Section 7.3.1 Item 8. The EPO switch must be a latching type to work correctly. The EPO switch is not included with the BBU and must be purchased separately.

10. If remote annunciator(s) are required by the AHJ, connect the Potter Remote Annunciator panel to the Annunciator PCBA Plink connector as shown in Section 7.3 Figure 5 and described in Section 7.3.1 Item 6. The Potter P-link 4 wire RS485 interface may be used only with the Potter Guardian Annunciator. Up to 16 Guardian Annunciators may be connected in series with a maximum line length of 6500 feet.

11. If using an annunciator from another manufacturer then the remote annunciator must be connected via the Annunciator PCBA dry contact outputs. See Annunciator PCBA Section 7.3 Figure 5 and description in Section 7.3.1 Item 9 for wiring details. Refer to the manufacturer's instructions for correct installation. EOL resistors may be required and are not provided with the Guardian BBU.

12. The Annunciator PCBA dry contact outputs can be utilized to connect to an FACP via vendor specific SLC interface modules. The dry contact outputs repeat the BBU integrated annunciator status to present the individual BBU and BDA supervisory indications or optional Summary supervisory indication to the FACP. See Annunciator PCBA Section 7.3 Figure 5 and description in Section 7.3.1 Item 9 for wiring details.

13. If utilizing a Potter FACP, the individual interface modules can be replaced with an optional Potter Multi I/O PCBA which supports up to ten (10) inputs and has a 2-wire SLC output to significantly reduce wiring. The Multi I/O PCBA can be mounted within the Guardian BBU enclosure. See Multi I/O PCBA Section 11 for details.

14. Verify Battery Breaker is in the OFF position. Connect batteries using the factory wired battery cables. 12V SLA batteries are connected in series using supplied battery jumper. See Section 7.1 Figure 3 if installing batteries in PN# 3996203 or Section 7.2 Figure 4 for installing batteries in PN# 3996204. SLA and LiFePO4 batteries are installed vertically within the enclosure and secured using the supplied battery straps or mounting fixtures. Terminals should be facing outward for ease of connection. See Stand-by Specifications Section 4, pg. 5 for compatible batteries. Using a multimeter, measure output at the battery circuit breaker input and verify 24-29 VDC is present.

15. Once all connections are made first put the BBU AC breaker in the ON position followed by putting the DC breaker in the ON position. Wait for 5 seconds then verify no audible indication is present and the BBU alarm LEDs on front panel indicate NORMAL state as follows:
    - AC Power Normal - GREEN
    - AC Fail – OFF
    - Battery Charger Fail - OFF
    - Low Battery - OFF
    - Donor Disconnect - OFF
    - RF Emitter Fail - OFF
    - System Component Fail - OFF

    Verify both 230/115 VAC (if utilized) and 24VDC are present at the respective outputs of the BBU. The Power Supply front panel DC ON LED should be illuminated, and the AC Fail and Status LEDs should be OFF. The Power Supply Status LED may be illuminated if the attached batteries require charging but will go OFF once the batteries reach maximum charge (usually within 30-60 minutes depending on battery state of charge). See Section 10 regarding the Power Supply front panel indication description.

16. If a remote annunciator is connected verify that the Remote Annunciator System Power is illuminated and no alarms are present including audible indication. Refer to the vendor remote annunciator installation manual for correct operation.

17. Verify that the connected BDA is powered on and functioning correctly. If confirmed, the installation is complete.

6. Power Supply Charging Configuration and Front Panel Indicators

The Mean-Well DRS-240-24 (10A) or DRS-480-24 (20A) power supply provided with the Guardian BBU is set at the factory for 3 stage charging profile and AGM/LiFePo4 battery type support (Front Panel DIP switch settings: 1-OFF, 2-ON, 3-ON), See Table 1 and Table 2 below. These settings must not be changed, or incorrect operation will result and failure to maintain sufficient battery charge can occur.

The front panel also provides indication of AC Fail and Power Supply Status. See Section 10 for additional information regarding Status LED indication definitions including charging status and diagnostics such as over temperature, over current and short conditions.

Table 1

1	OFF:3-stage (default) , ON:2-stage	
2	Refer to the following table	
3		

Table 2

DIP SW		24V model		
2	3	Description	CC(default)	Vboost
OFF	OFF	Default, programmable	7.7A	28.8
ON	OFF	Pre-defined, Gel battery		28.0
OFF	ON	Pre-defined, flooded		28.4
ON	ON	Pre-defined, AGM and LiFeO4		29.2

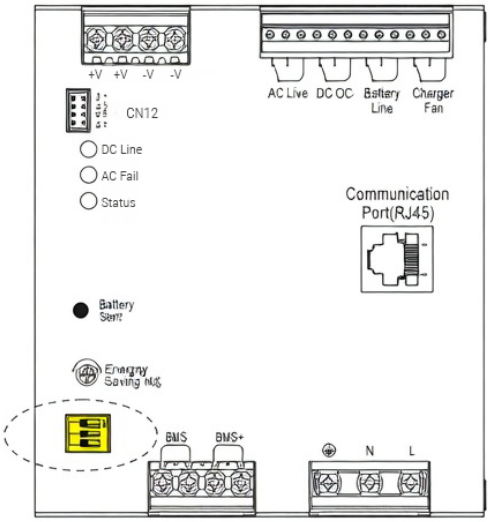

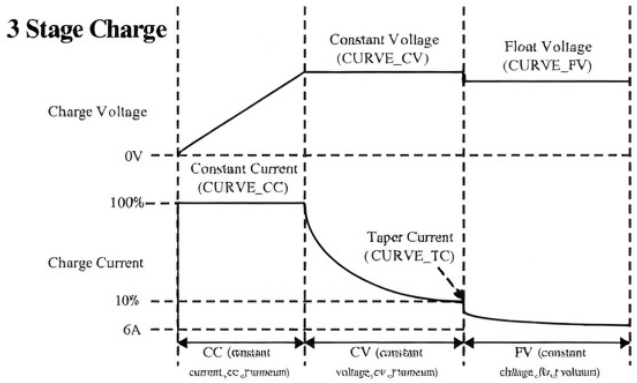

Figure 2

7. Wiring Diagrams

For wiring entering and exiting the enclosure, UL Listed/Recognized Type 4X/IP68 rated hardware is to be employed. It is recommended to use separate entry points for non-power-limited wiring (AC input, batteries and DC output) and power-limited low voltage wiring (trouble relays contacts). 0.25” spacing between power-limited and non-power-limited circuits is to be provided. Use 14 AWG or larger for all power connections.

7.1 Guardian BBU 24V 10A (PN#3996203) Wiring

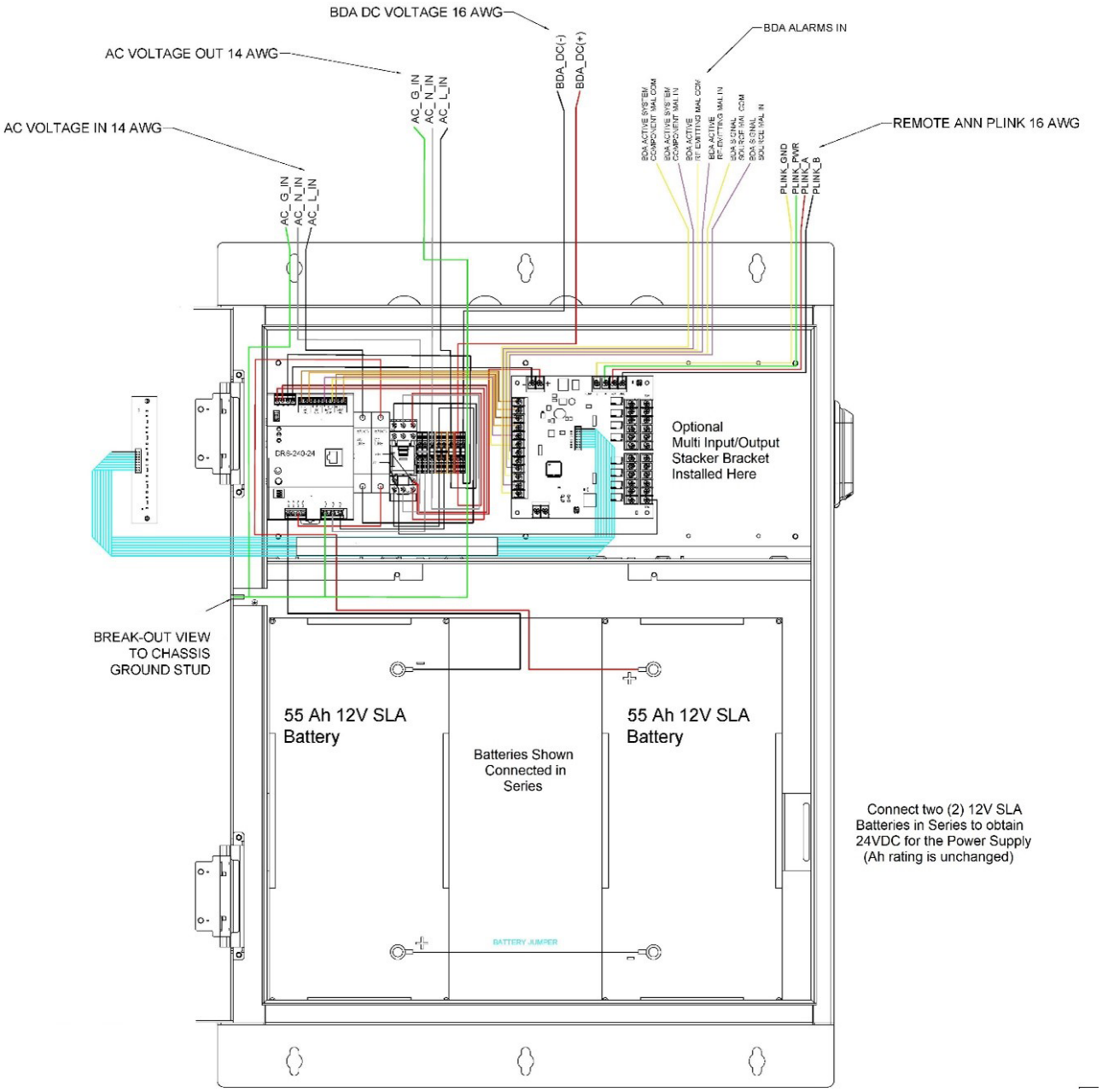

Figure 3

7.2 Guardian BBU 24V 20A (PN#3996204) Wiring

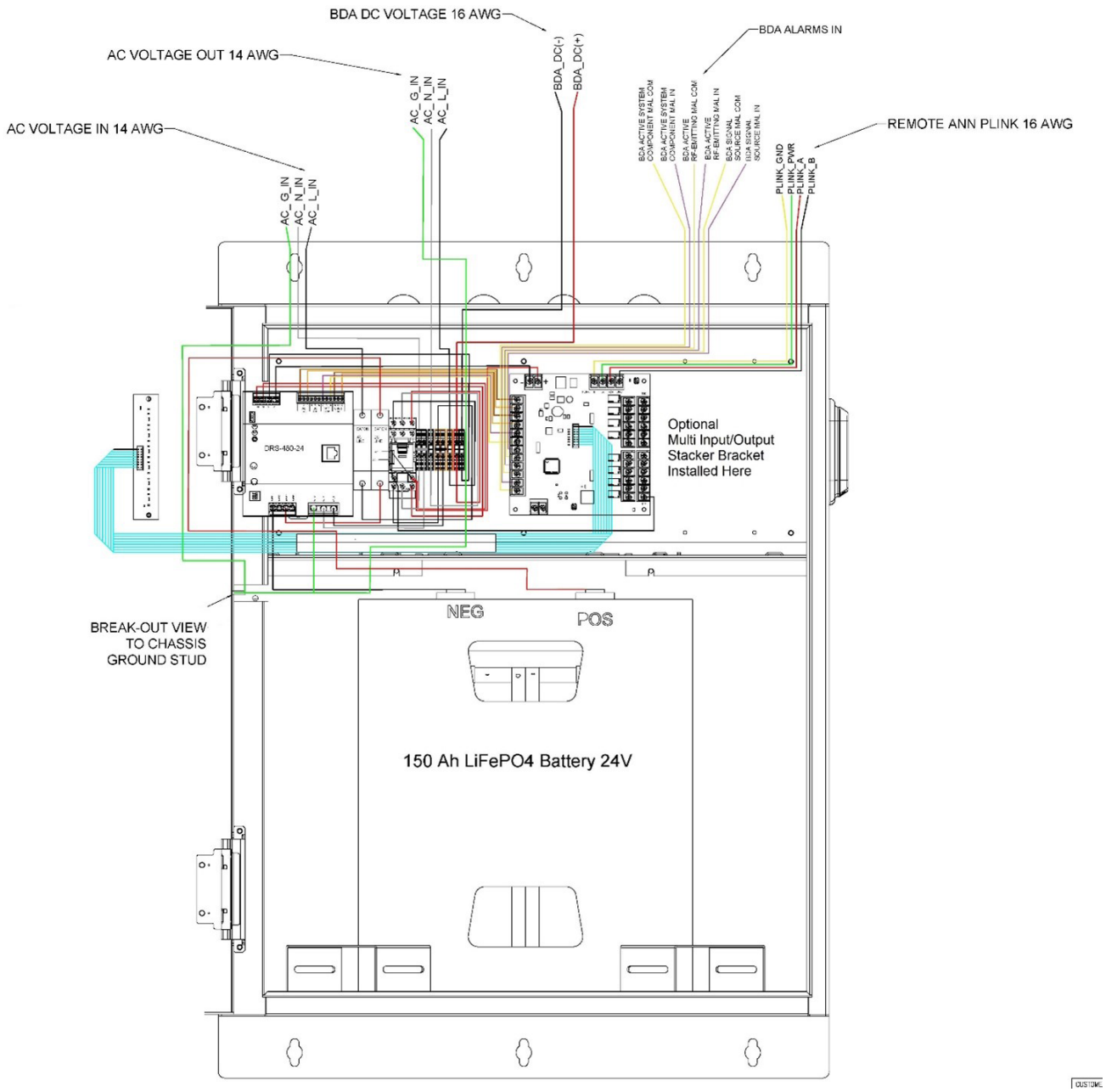

Figure 4

7.3 Power Supply & Annunciator PCBA Detailed Wiring Diagram

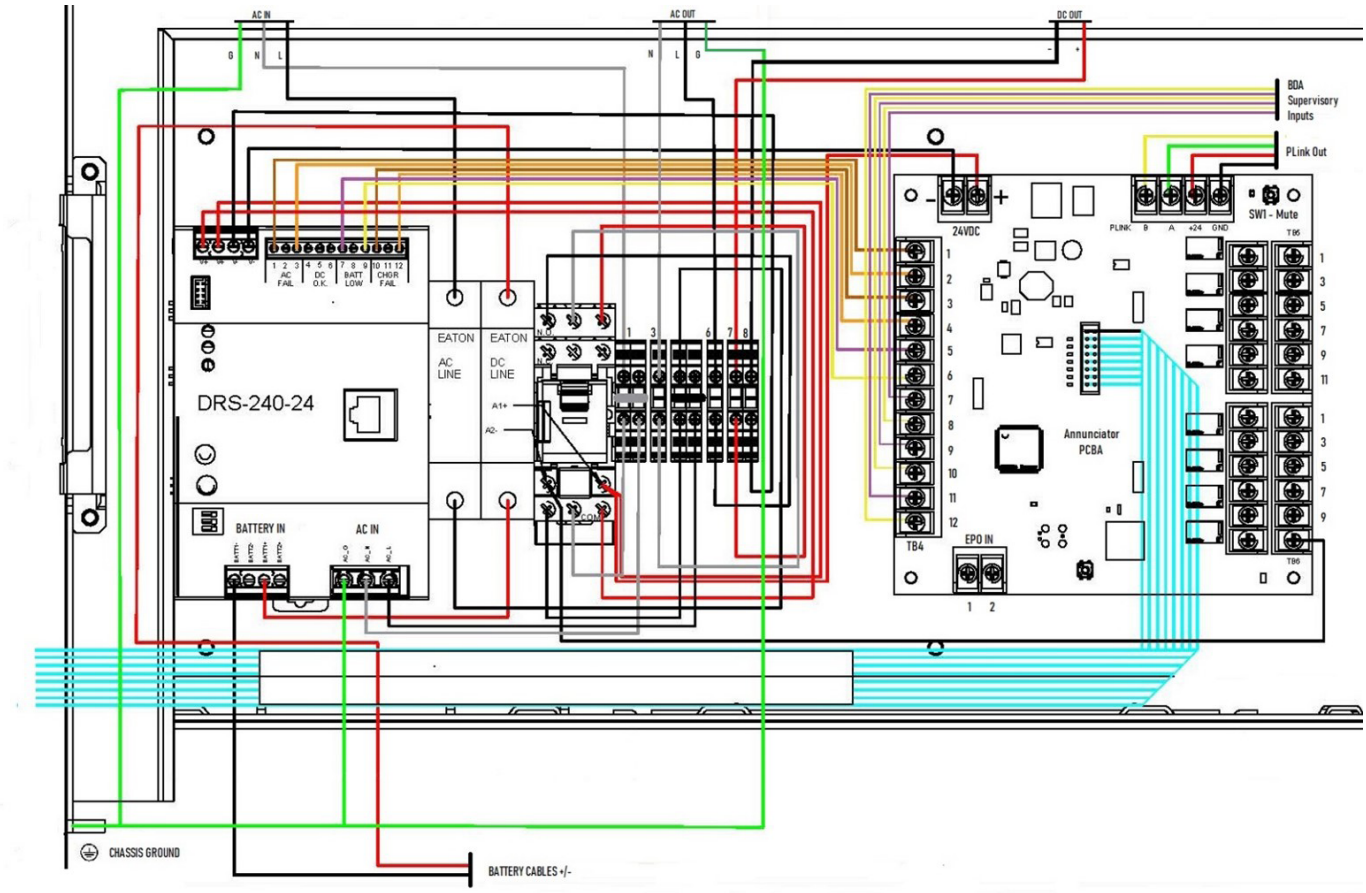

Figure 5

7.3.1 Annunciator PCBA Terminal Legend

Item	Terminal Legend	Function/Description
1	AC IN L, G, N	Connect 115-220VAC 50/60Hz cable (14 AWG recommended) as follows: • Load (L) to AC Breaker AC Load Terminal (top connector) • Neutral (N) to DIN rail mounted terminal block #1 (top connector) • Connect Ground (G) to the enclosure Ground post using ring terminal connector • (Ground post is labeled and located enclosure interior left side mid height)
2	DC+ Out	24 VDC @ 10A (PN#) or 24 VDC @ 20A (PN#) DC (+) Output BBU DIN rail mounted terminal block #7 (top) connects to Guardian BDA DC (+) Input Terminal
3	DC- Out	24 VDC @ 10A (PN#) or 24 VDC @ 20A (PN#) DC (-) Output BBU DIN rail mounted terminal block #8 (top) connects to Guardian BDA DC (–) Input Terminal

<table>
<tr><td>4</td><td>BBU Supervisory
Indication Inputs
(Factory Wired)</td><td>BBU Power Supply TB4 Provides UL2524 3rd Edition Supervisory Indication Outputs (Inputs to Annunciator PCBA are Factory Wired)
<table><tr><th>POWER SUPPLY TB4 OUTPUT</th><th>ANNUNCIATOR PCBA TB4 INPUT</th></tr><tr><td>AC Failure N.O.</td><td>Terminal #1</td></tr><tr><td>AC Failure COM</td><td>Terminal #2</td></tr><tr><td>Charger Failure N.O</td><td>Terminal #3</td></tr><tr><td>Charger Failure COM</td><td>Terminal #4</td></tr><tr><td>Battery Low N.O.</td><td>Terminal #5</td></tr><tr><td>Battery Low COM</td><td>Terminal #6</td></tr></table></td></tr>
<tr><td>5</td><td>BDA Supervisory
Indication Inputs</td><td>BBU Power Supply TB4 Provides UL2524 3rd Edition Supervisory Indication Outputs (Inputs to Annunciator PCBA are Factory Wired)
<table><tr><th>BDA OUTPUT</th><th>ANNUNCIATOR PCBA TB4 INPUT</th></tr><tr><td>Donor Malfunction N.O.</td><td>Terminal #7</td></tr><tr><td>Donor Malfunction COM</td><td>Terminal #8</td></tr><tr><td>RF Emitter Failure N.O.</td><td>Terminal #9</td></tr><tr><td>RF Emitter Failure COM</td><td>Terminal #10</td></tr><tr><td>System Component Failure N.O.</td><td>Terminal #11</td></tr><tr><td>System Component Failure N.O.</td><td>Terminal #12</td></tr></table>For the annunciator to detect both open and shorts as well as supervisory indications from the BDA, the supplied 10K 1/4W End-of-Line resistor (EOLR) must be connected across the BDA N.O. and COM terminals at the BDA not at the BBU Annunciator PCBA. Refer to the specific Guardian BDA manual being installed for wiring details.</td></tr>
<tr><td>6</td><td>Remote Annunciator
P-Link Output</td><td>If connecting a Potter Guardian Annunciator to the BBU the P-Link 4-wire interface may be used to reduce wiring. The P-Link interface can support up to 16 remote annunciators to a maximum distance of 6500 feet. A 2-wire signaling interface (B, A terminals) plus 24VDC output to power remote devices is provided via Annunciator PCBA TB3.
Connect the B, A, +24VDC, and GND terminals to the remote annunciator P-Link input terminals. See Guardian Remote Annunciator manual for correct wiring connections.</td></tr>
<tr><td>7</td><td>AC Out</td><td>220/115 VAC 50/60Hz Output is provided to power Guardian BDA devices that require both AC and DC input. Refer to appropriate Guardian BDA installation manual for wiring details.

BDA Connections:
BBU DIN rail mounted terminal block #6 (top) Load (L) to BDA AC Load Input Terminal
BBU DIN rail mounted terminal block #3 (top) Neutral (N) to BDA AC Neutral terminal
BBU Ground Post (G) using ring terminal connector to BDA AC Ground terminal</td></tr>
</table>

8	EPO Switch TB1	An optional remote Emergency Power Off (EPO) latching type switch is supported. See vendor manual for detailed installation instructions. Connect EPO switch N.O. contact terminal to Annunciator TB1 terminal #1 Connect EPO switch COM contact terminal to Annunciator TB1 terminal #2
9	Supervisory Indication Form "C" Dry Contact Output To FACP via Vendor Specific Single SLC Module or Optional Potter Multi I/O Module Or To Remote Annunciator (Refer to Vendor Installation Manual For Wiring Details)	Seven (7) Form "C" N.O. or N.C. outputs are supported utilizing Annunciator PCBA TB5 and TB6. Relay Contacts are Form "C'. Contact rating is1A/30VDC. The Summary output provides supervisory indication if any of the six UL2524 required indications are present. Use diagrams below. Note that End of Line (EOL) resistors may be required by the SLC module vendor and are NOT supplied with the BBU. BBU Alarm Dry Contact Outputs 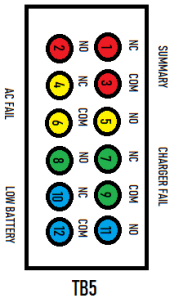 BDA Alarm Dry Contact Outputs 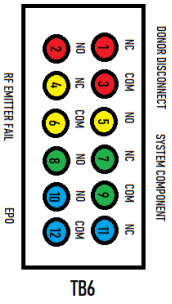

8. Integrated Annunciator Front Panel LED Diagnostics

AC POWER NORMAL

LED	Power Supply AC Input Status
STEADY GREEN	AC Power Normal
LED OFF	AC Power Not Present; Audible Alert Will Sound Continuously Unless Silenced

AC POWER FAIL – BATTERY BACKUP ACTIVE

LED	Power Supply AC Input Status
STEADY RED	AC Power Normal
LED OFF	AC Power Not Present; Audible Alert Will Sound Continuously Unless Silenced

CHARGER FAILURE

LED	Power Supply AC Input Status
STEADY RED	Charger Failure Detected; Audible Alert Will Sound Continuously Unless Silenced
LED OFF	Charger Function Normal

BATTERY LOW

LED	Power Supply AC Input Status
STEADY RED	Battery is missing or discharged below 70% capacity; Audible Alarm Will Sound Continuously Unless Silenced
LED OFF	Battery is in normal charged state (>70% capacity)

BATTERY LOW

LED	Bi-Directional Amplifier Supervisory Indication Donor Malfunction (Donor Antenna Disconnected/No Signal Present)
STEADY RED	Donor Malfunction (Disconnected); Audible Alert Will Sound Continuously Unless Silenced
LED OFF	Donor Normal State (Donor Connected, Signal Present)

ACTIVE RF EMITTING DEVICE FAILURE

LED	Bi-Directional Amplifier Supervisory Indication RF Emitting Device Failure (Oscillation State/Poor Isolation Detected)
STEADY RED	RF Emitting Device Failure, Audible Alert Will Sound Continuously Unless Silenced
LED OFF	RF Emitter Normal State

SYSTEM COMPONENT FAILURE

LED	Bi-Directional Amplifier Supervisory Indication System Component Failure (PA Overpower/ HW fault)
STEADY RED	System Component Failure, Audible Alert Will Sound Continuously Unless Silenced
LED OFF	System Component Normal State

9. Testing And Maintenance

Unit should be tested at least once a year for the proper operation as follows:	
Output Voltage Test:	Under normal load conditions, the DC output voltage should be checked for proper voltage level (refer to Power Supply Voltage Output Specifications section 2).
Supervision Test:	Disconnect backup battery via Battery Breaker Switch (see Section 7.3 Figure 5). Make sure that LED and relays indicate Battery Low and Charger Failure. Reconnect batteries. Disconnect AC via AC Breaker Switch (see Section 7.3 Figure 5). Make sure that LED and supervisory relays indicate AC loss and Charger Failure. Detection/restoration of the fault condition may take up to 30 seconds.
Battery Test:	Under normal load conditions, check that the battery is fully charged. Check specified voltage both at the battery terminals and at the Power Supply Battery – terminal and Battery Breaker Terminal to ensure that there is no break in the battery connection wires. (See Section 7.3 Figure 5 for wiring details.)
Note:	Expected battery life of SLA Battery is 5 years, however it is recommended changing SLA batteries in 4 years or less if needed. LiFePO4 battery life is 10 years, however it is recommended to change the battery after 9 years or less if needed.

10. Power Supply Troubleshooting

The Power Supply front panel provides LED indication of Status and Alarms. In the event the Guardian BBU is not functioning correctly the following diagrams may be used to identify the status and alarm state of the Mean-Well DRS 240 or DRS 480 Power Supply.

THE POWER SUPPLY IS NOT SERVICABLE. TAMPERING OR ALTERATIONS OF ANY KIND VOID THE GUARDIAN BBU WARRANTY.

Panel description

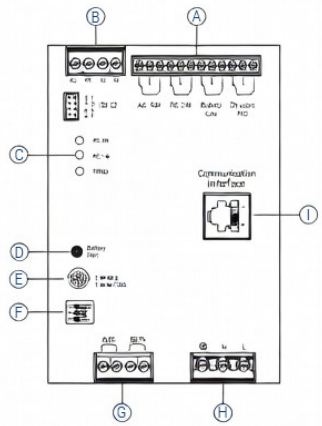

Ⓐ Alarm signal:
It is used for monitoring function.
Ⓑ Terminals of DC output
Ⓒ LED indicators: To show the status of unit.
Ⓓ Battery start button:
Restart system directlly from battery and does not require AC power
Ⓔ I/O ADJ: For charging current setting (depend on battery capacity)
Ⓕ Charging curve setting

1	OFF.3-stage (default), ON.2-stage
2	Charging curve setting
3	

Please refer to chapter 5.3.4.1
Ⓖ Terminals of battery connection
Ⓗ Terminals of AC input
Ⓘ For Modbus communication

LED indicator

Indicator		Description	LED indicator
DC OK		DC fail	OFF
		DC OK	Green
AC fail		AC fail	Red
		AC OK	OFF
Status	Charging status	Float	Green
		Charging CC/CV	Red
	Syatem Diagnoatic	Discharging	Orange:1Blink/Pause
		Charger fail	Red: 1Blink/Pause
		Battery overvoltage/ Battery reverse polarity	Red: 2Blink/Pause
		Battery low/ No battery	Red: 2Blink/Pause
		Battery discharging peak power over timeout	Red: 4Blink/Pause
		Over load/ Short	Red: 5Blink/Pause
		Over temperature	Red: 6Blink/Pause
		Timeout	Red: 7Blink/Pause

Figure 6

11. Potter PAD300-10XIM Multi Input/Output Module Installation (Optional)

If connecting the Guardian BBU to a Potter FACP, the installer may optionally use the Potter PAD300-10XIM Multi Input/Output module which supports up to 10 class B dry contact relay inputs and a 2 wire SLC output supporting up to 10 unique SLC addresses.

The PAD300-10XIM resides on a stacker bracket for mounting in the Guardian BBU. Dip switches are used to set addresses and define unused points. Four mounting PEM attach points are provided to secure the module and stacker bracket to the enclosure upper power supply assembly.

Once installed follow the wiring instructions as shown in Section 7.3 Figure 5 and Section 7.3.1 Item 9 and the installation instructions provided with the PAD300-10XIM module.

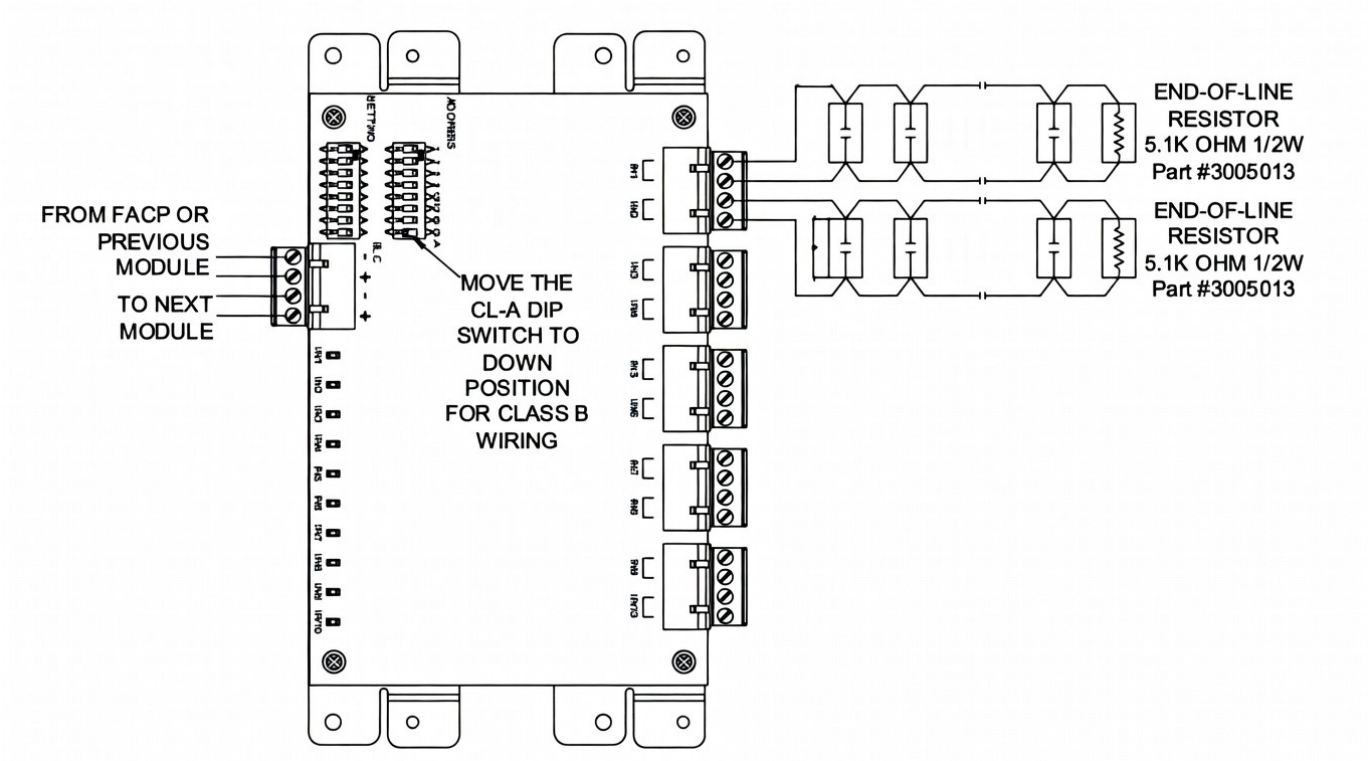

Figure 7

12. Mechanical Assembly Drawings

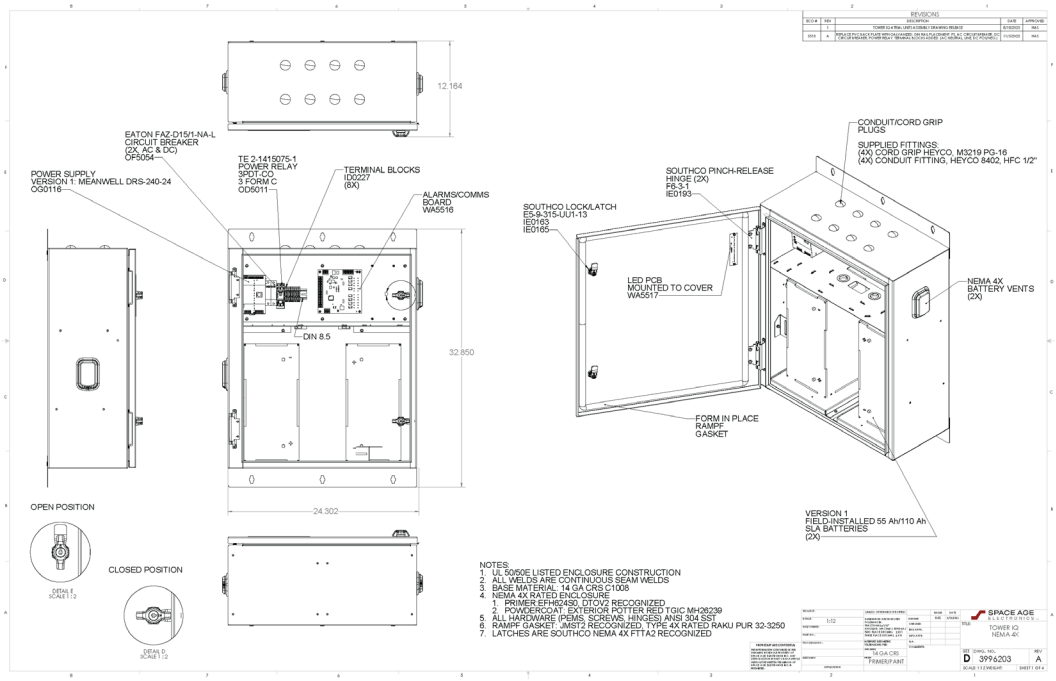

Figure 8

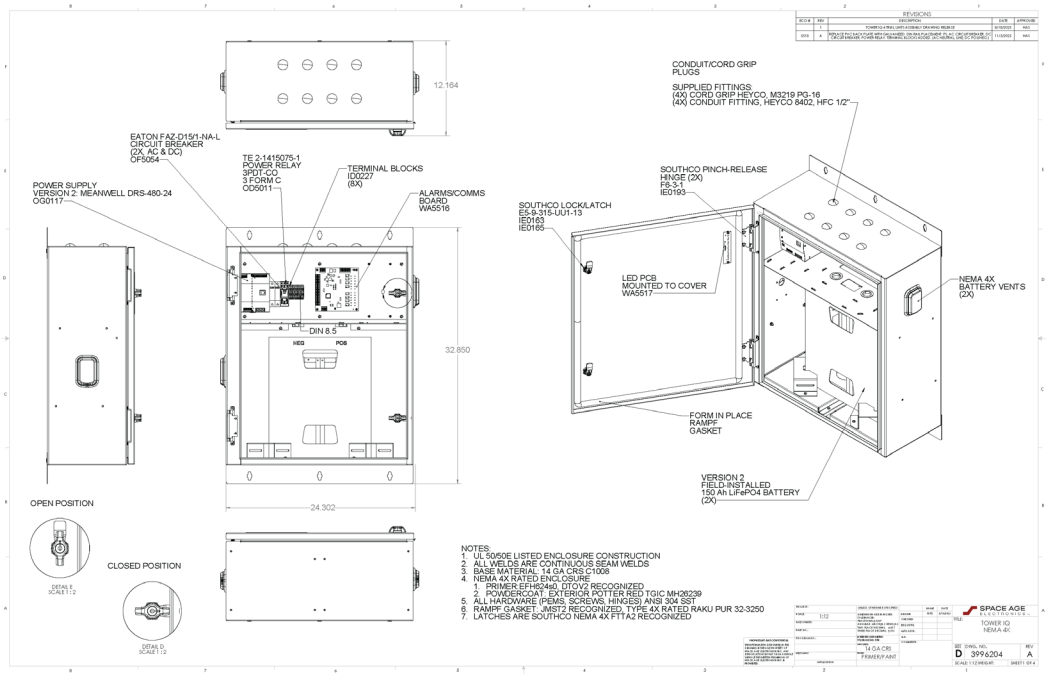

Figure 9

13. Connectors installation

13.1 Liquid Tight Cordgrips installation

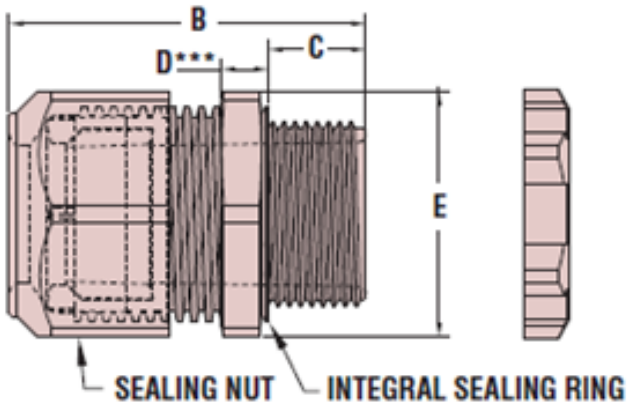



13.2 Liquid Tight Conduit Fittings installation

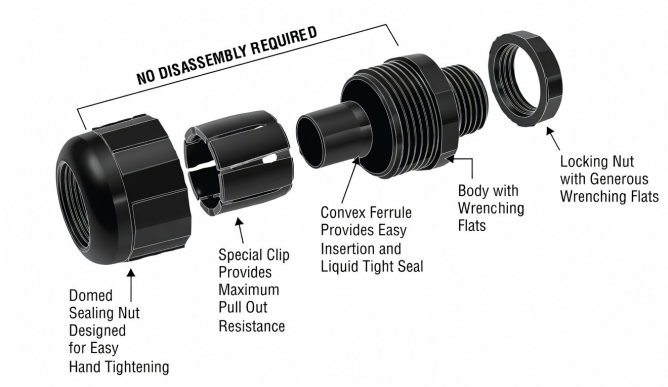

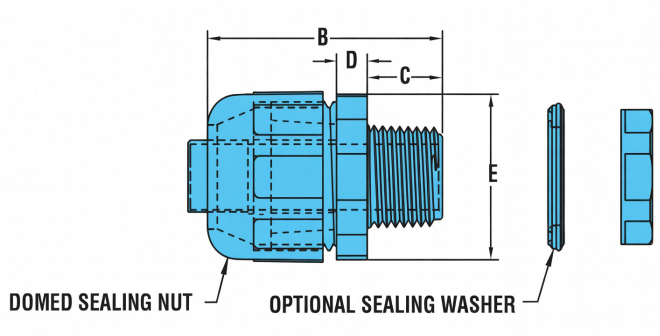

14. Warranty

For questions regarding your warranty, contact a Potter ERCES representative at 844-626-7638 or

email cs-guardian@pottersignal.com.

14.1 Warranty Period

Potter ERCES products are covered under a three-year product warranty from the date of purchase. This protects the customer from any defects or problems the product may have that are solely the fault of Potter ERCES. Incorrect installation or misuse will void this warranty. Upon the return of a defective product. Potter ERCES will issue the customer a working replacement. All returned packages should contain all products distributed.

14.2 Three-Year Product Warranty

Potter ERCES warrants its products for three years from the date of purchase against defects in workmanship and/or materials. Specifications are subject to change.

Products returned by customers must be in their original, un-modified condition, shipped in the original or protective packaging with proof- of-purchase documentation enclosed, and a Return Merchandise Authorization (RMA) number printed clearly on the outside of the shipping container.

Buyers may obtain an RMA number for warranty returns by calling the Potter ERCES Return Department toll-free at 1-888-365-6283. Any returns received by Potter ERCES without an RMA number clearly printed on the outside of the shipping container will be returned to sender. In order to receive full credit for signal boosters, all accessories originally included in the signal booster box must be returned with the signal booster. (The Buyer does not need to include accessories sold in addition to the signal booster, such as antennas or cables.)

This warranty does not apply to any product determined by Potter ERCES to have been subjected to misuse, abuse, neglect, or mishandling that alters or damages the product's physical or electronic properties.

Potter ERCES warrants to the Buyer that each of its products, when shipped, will be free from defects in material and workmanship, and will perform in full accordance with applicable specifications. The limit of liability under this warranty is, at Potter ERCES's option, to repair or replace any product or part thereof which was purchased up to THREE YEARS prior, as determined by examination by Potter ERCES, prove defective in material and/or workmanship. Warranty returns must first be authorized in writing by Potter ERCES. Disassembly of any Potter ERCES product by anyone other than an authorized representative of Potter ERCES voids this warranty in its entirety. Potter ERCES reserves the right to make changes in any of its products without incurring any obligation to make the same changes on previously delivered products.

As a condition to the warranties provided for herein, the Buyer will prepay the shipping charges for all products returned to Potter ERCES for repair, and Potter ERCES will pay the return shipping with the exception of products returned from outside the United States, in which case the Buyer will pay the shipping charges.

The Buyer will pay the cost of inspecting and testing any goods returned under the warranty or otherwise, which are found to meet the applicable specifications, or which are not defective or not covered by this warranty.

Products sold by Potter ERCES shall not be considered defective or non-conforming to the Buyer's order if they satisfactorily fulfill the performance requirements that were published in the product specification literature, or in accordance with samples provided by Potter ERCES. This warranty shall not apply to any products or parts thereof which have been subject to accident, negligence, alteration, abuse, or misuse. Potter ERCES makes no warranty whatsoever in respect to accessories or parts not supplied by it.

Limitations of Warranty, Damages and Liability

EXCEPT AS EXPRESSLY SET FORTH HEREIN, THERE ARE NO WARRANTIES, CONDITIONS, GUARANTEES, OR REPRESENTATIONS AS TO MERCHANTABILITY, FITNESS FOR A PARTICULAR PURPOSE, OR OTHER WARRANTIES, CONDITIONS, GUARANTEES, OR REPRESENTATIONS, WHETHER EXPRESSED OR IMPLIED, IN LAW OR IN FACT, ORAL OR IN WRITING.

POTTER ERCES AGGREGATE LIABILITY IN DAMAGES OR OTHERWISE SHALL NOT EXCEED THE PAYMENT, IF ANY, RECEIVED BY TowerIQ, INC. FOR THE UNIT OF PRODUCT OR SERVICE FURNISHED OR TO BE FURNISHED, AS THE CASE MAY BE, WHICH IS THE SUBJECT OF CLAIM OR DISPUTE. IN NO EVENT SHALL POTTER ERCES BE LIABLE FOR INCIDENTAL, CONSEQUENTIAL, OR SPECIAL DAMAGES, HOWSOEVER CAUSED.

All matters regarding this warranty shall be interpreted in accordance with the laws of the State of Missouri, and any controversy that cannot be settled directly shall be settled by arbitration in Missouri in accordance with the rules then prevailing of the American Arbitration Association, and judgment upon the award rendered may be entered in any court having jurisdiction thereof. If one or more provisions provided herein are held to be invalid or unenforceable under applicable law, then such provision shall be ineffective and excluded to the extent of such invalidity or unenforceability without affecting in any way the remaining provisions hereof.

1609 Park 370 Place,

Hazelwood, MO 63042

844-626-7638

www.pottersignal.com

Potter ERCES has made a good faith effort to ensure the accuracy of the information in this document and disclaims the implied warranties of merchantability and fitness for a particular purpose and makes no express warranties, except as may be stated in its written agreement with and for its customers. Potter ERCES shall not be held liable to anyone for any indirect, special or consequential damages due to omissions or errors. The information and specifications in this document are subject to change without notice.

© 2025. All Rights Reserved. All trademarks and registered trademarks are the property of their respective owners.